WIRING DIAGRAM

Connect the control unit, motor and door switch

Use a 12 V DC supply. Keep the supply isolated and the 16 A fuse removed until all connections have been completed and checked.

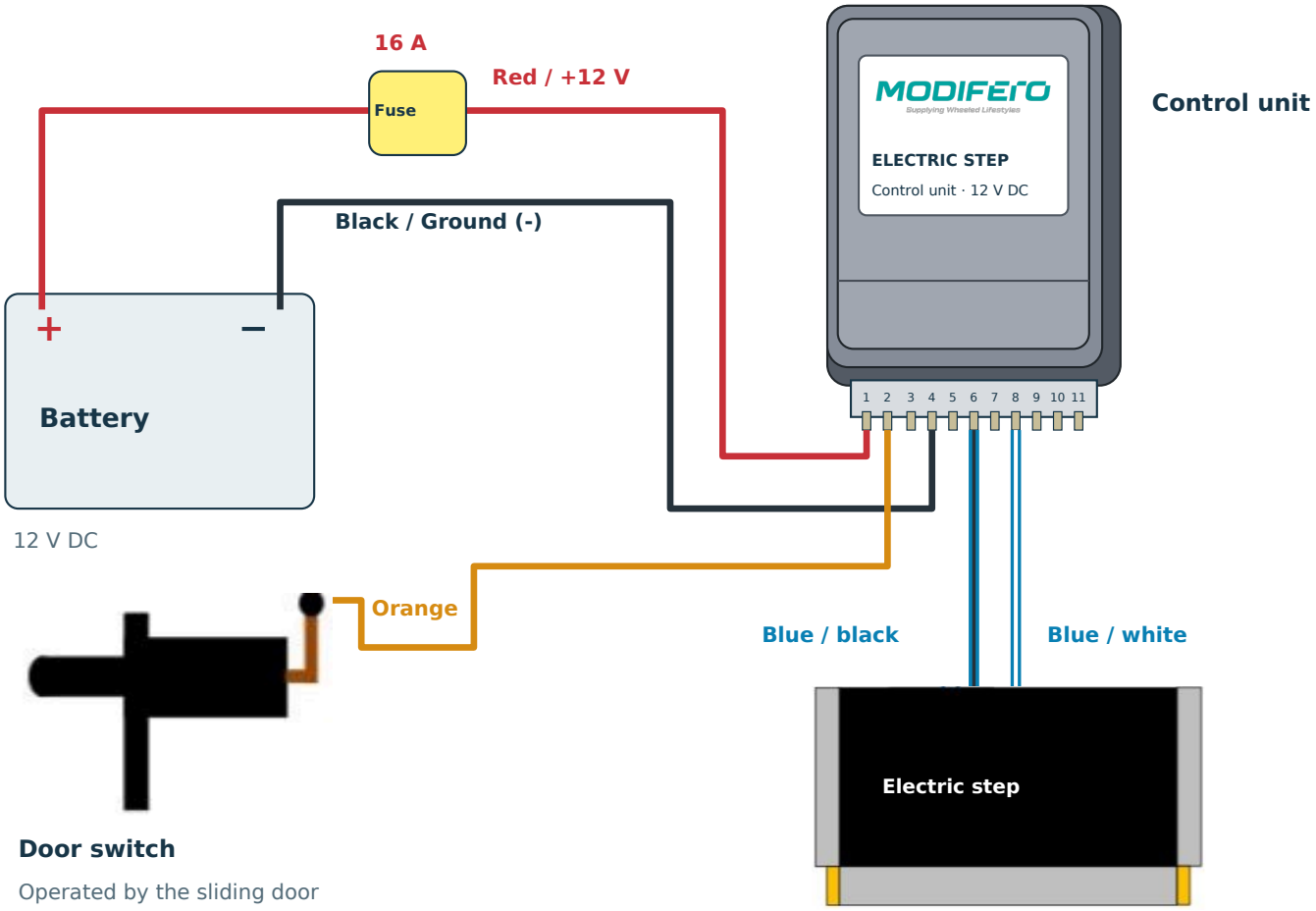

ECU illustration follows the supplied housing references. Connection routes are schematic.

Connection reference

Pin 1	Red	Battery +12 V via 16 A fuse
Pin 2	Orange	Door-switch signal
Pin 4	Black	Battery negative / ground (-)
Pin 6	Blue / black	Motor connection
Pin 8	Blue / white	Motor connection

Supply cable: 2 × 2.5 mm² between the battery and the control unit, as specified in the existing installation instructions.

Before energising: Check polarity, connections and cable protection; keep the full step travel area clear. Insert the fuse only after these checks.