SAFETY, CONTENTS AND PRE-INSTALLATION TEST

Before installation

Check the supplied step, brackets and fasteners against the intended mounting arrangement. Identify suitable support points and ensure sufficient clearance for platform movement.

Inspect behind proposed drilling points. Isolate the supply for mechanical work, and support the step securely while positioning and fixing it.

Brief direct motor test - 12 V DC only

Disconnect the motor from the control unit. Secure and support the step, leaving the full travel area clear. Apply 12 V DC momentarily to check movement in both directions.

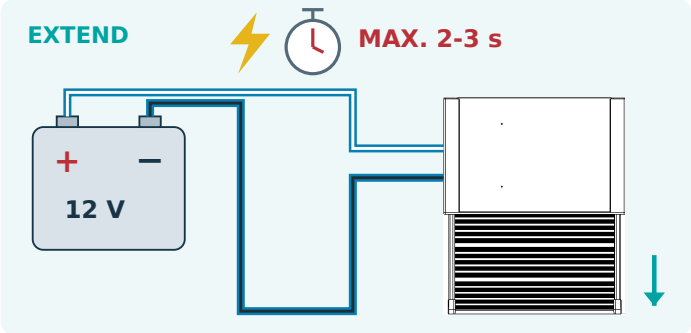

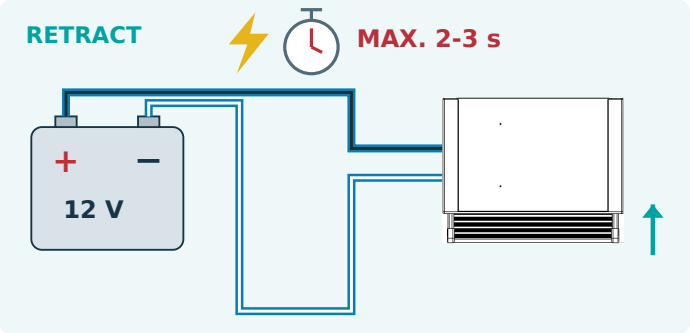

Blue / black + blue / white: reverse the battery connections for the second test.

Disconnect as soon as movement is confirmed. Never energise for more than 2-3 seconds. If an end position is reached, disconnect immediately. Do not make a permanent direct connection. If movement is absent or abnormal, investigate before proceeding.

Safe installation and use

• Use suitable lifting and support equipment when working beneath the vehicle.

• The step has no anti-pinch detection or automatic obstacle reversal. Keep people, hands, feet and objects clear while it moves.

• Keep the supply isolated during mechanical work. Use the step only when fully extended and stopped.

Contents - select a section

Set contents 2

Front mounting 3

Installed views 4

Rear supports 5

Electrical connections 6

Door switch and first test 7

Final checks and handover 8

KIT CONTENTS | DIRECT FRONT-FACE MOUNTING

Main components

1 ×



Electric sliding step

1 ×



Control unit

1 ×



Main wiring harness

1 ×



Door switch assembly

2 ×



Rear support brackets

1 ×



Switch extension wire

2 ×



Single-hole nut plates

2 ×



M8 × 12 mm bolts

4 ×



M6 × 9.5 mm bolts

4 ×



M6 × 32 mm bolts

1 ×



Switch screw 3.9 × 14 mm

1 ×



Female terminal

1 ×



Terminal insulating housing

Mounting hardware allocation

Front: four M6 × 9.5 mm bolts through the vehicle skirt into the threaded step front face.
Rear: two single-hole nut plates + two M8 × 12 mm bolts in total.
Insert the rear-support nut plates from the rear ends of the side channels.

Version-specific hardware
No additional front left/right brackets or long two-hole nut plates are used. The M8 × 12 mm quantity is two for the rear supports. Four M6 × 9.5 mm bolts, one terminal and one insulating housing are included.

Illustrations identify component types; geometry is schematic. Check the supplied hardware against this mounting version.

FRONT INSTALLATION | DIRECT CONNECTION THROUGH VEHICLE SKIRT

1 Position the step at the vehicle skirt

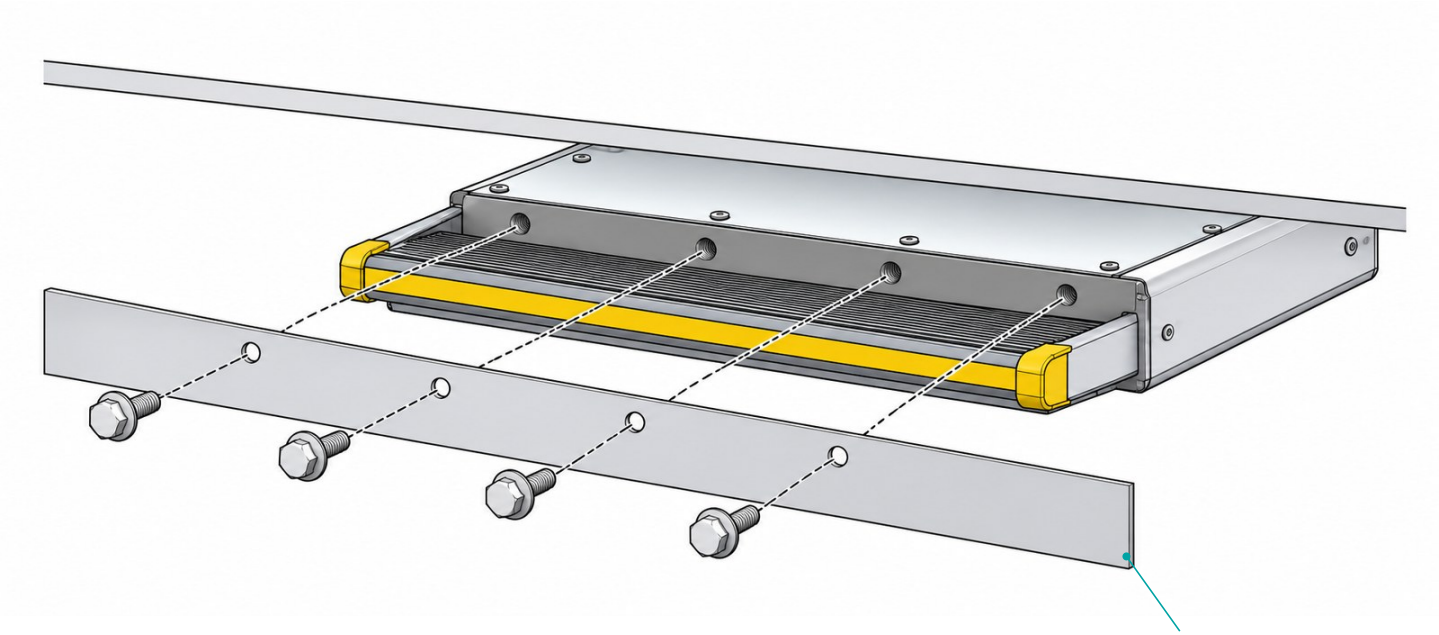

Vehicle skirt panel (section)

Position and mark

Support the step below the entrance with its threaded front face behind the vehicle skirt. Leave clearance above the moving platform and check access to the rear support points.

Align the four threaded front fixing positions with the skirt and mark all four hole centres. Keep the step supported throughout the work.

2 Drill the vehicle skirt

Move the step away before drilling. Inspect behind all four marks. Drill four Ø7 mm clearance holes in the vehicle skirt only, following the existing installation specification.

Deburr and protect exposed metal. The step front-face holes are already threaded: do not drill them out.

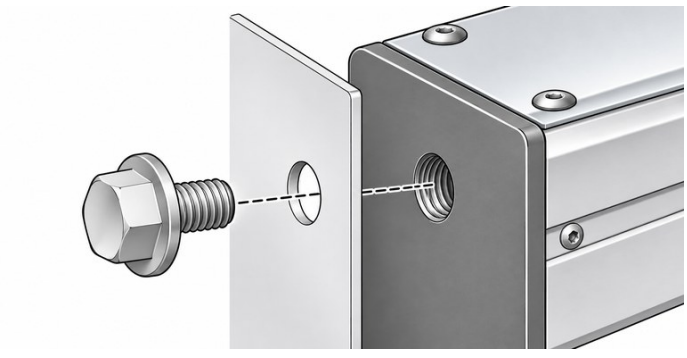

Bolt → vehicle skirt → threaded step front face

3 Secure the four front fixings

Reposition the step. Insert the four M6 × 9.5 mm bolts from outside the skirt into the threaded step front face. Start all four by hand and tighten evenly.

Then fit the rear supports as described on page 5. Keep the step supported until both rear supports are secure.

FRONT INSTALLATION | INSTALLED VIEWS

Step secured behind the vehicle skirt

General view and close-up of the direct front-face mounting arrangement.

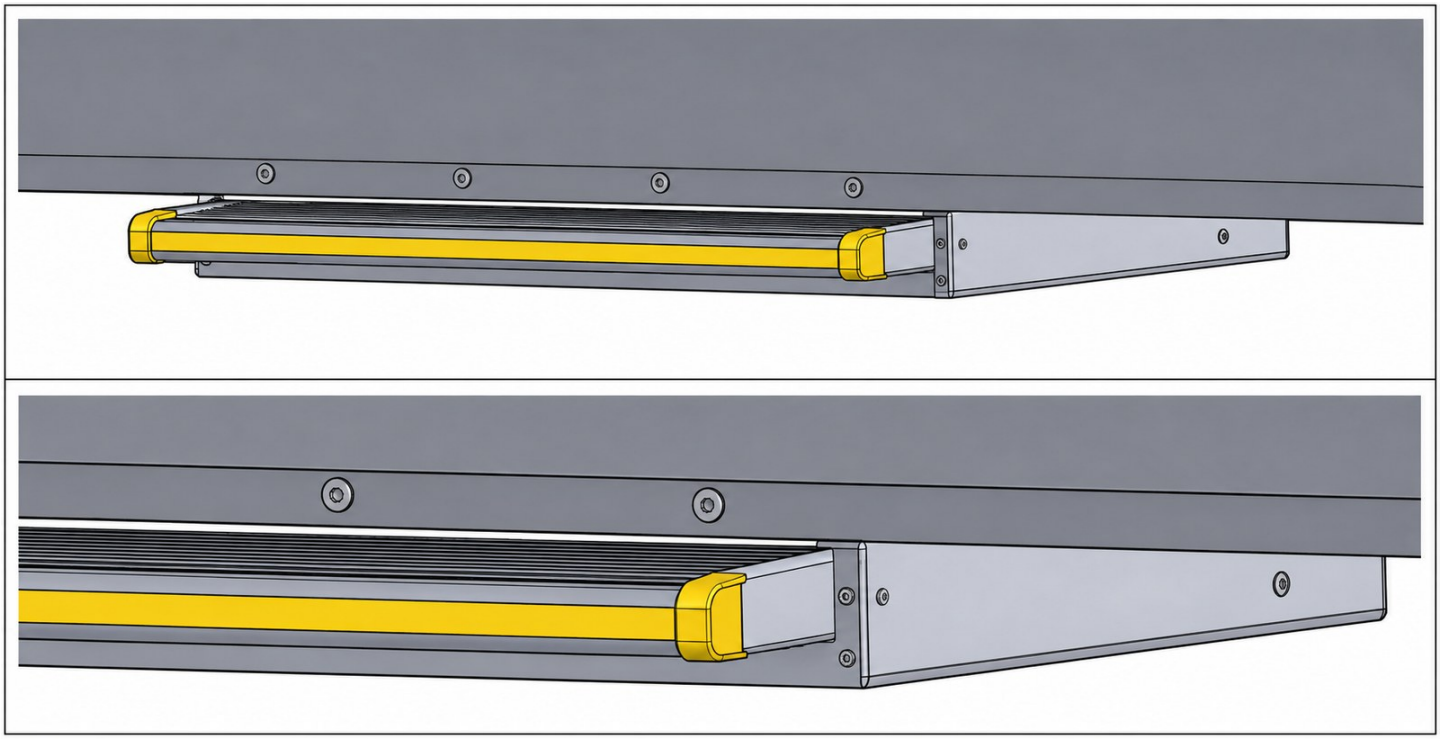

The four front bolts pass through the vehicle skirt and thread into the fixed front face of the step housing.

Keep the moving platform and its end caps clear of the vehicle skirt. The skirt is part of the vehicle body; it is not part of the step.

Complete the rear support installation before removing the temporary support beneath the step.

03 | REAR SUPPORTS AND MECHANICAL CHECKS

4 Fit the rear support brackets

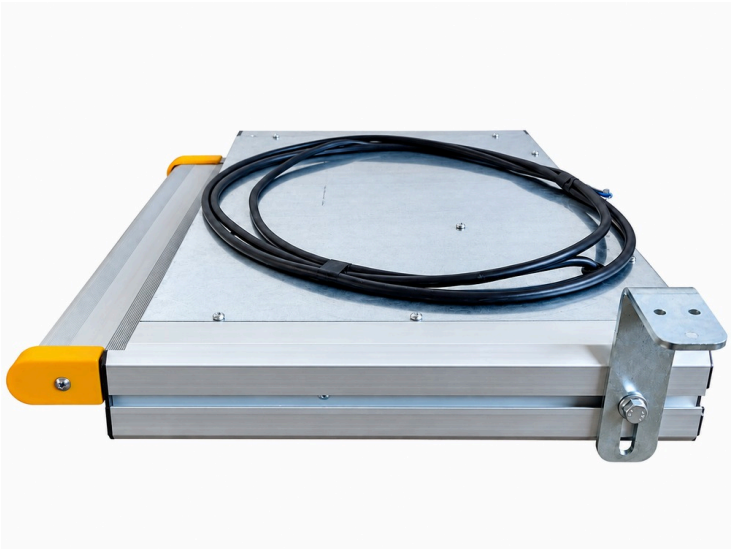

Slide one single-hole nut plate into each channel from its rear end . Align it with the rear bracket. Fit 1 × M8 × 12 mm bolt through the bracket into the plate.

Use two single-hole plates and two bolts in total. Connect the upper ends of the rear supports to suitable structural mounting points.

Align the housing without twisting it. Secure both rear supports before removing the temporary support beneath the step.





Installation references show an earlier platform-end design. Use them to understand bracket placement; the supplied step appearance may differ. They do not define vehicle-specific drilling locations.

5 Check before reconnecting power

Confirm all front and rear fixings are secure, the housing is supported without distortion, and the platform travel area is clear. Route the cable away from exhaust heat, sharp edges and moving components.

Next: Complete the electrical connections and door-switch installation, then verify full extension and retraction before use.

04 | ELECTRICAL CONNECTIONS - COMMON TO BOTH MOUNTING VERSIONS

6 Connect the control unit, motor and door switch

Use a 12 V DC supply. Keep the supply isolated and the 16 A fuse removed until all connections have been completed and checked.

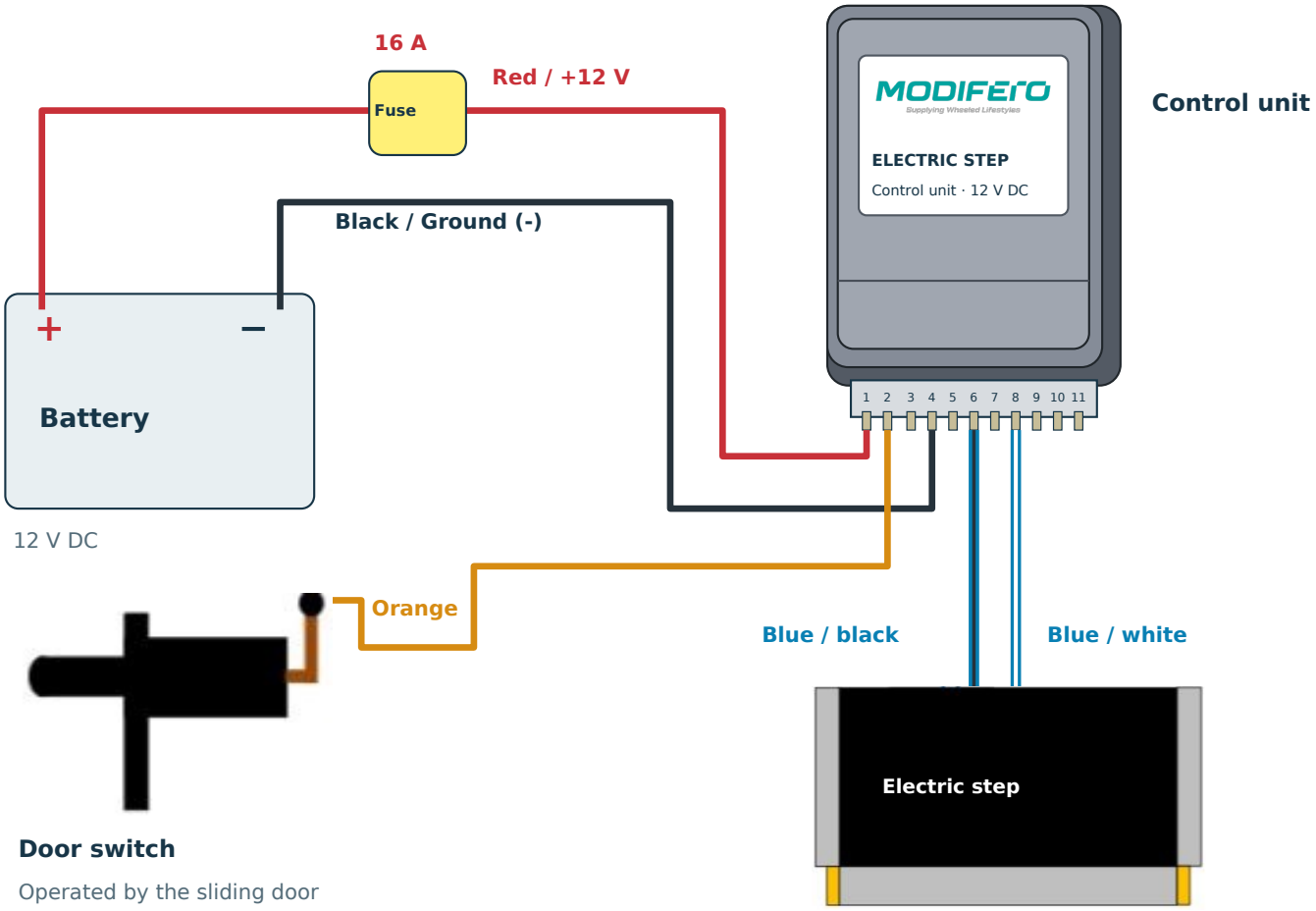

ECU illustration follows the supplied housing references. Connection routes are schematic.

Connection reference

Pin 1	Red	Battery +12 V via 16 A fuse
Pin 2	Orange	Door-switch signal
Pin 4	Black	Battery negative / ground (-)
Pin 6	Blue / black	Motor connection
Pin 8	Blue / white	Motor connection

Supply cable: 2 × 2.5 mm² between the battery and the control unit, as specified in the existing installation instructions.

Before energising: Check polarity, connections and cable protection; keep the full step travel area clear. Insert the fuse only after these checks.

05 | DOOR SWITCH INSTALLATION AND FIRST OPERATION

7 Position, drill and fit the door switch

Hold the switch against the fixed door frame and slowly close the door to check plunger contact and clearance. Mark the position directly on the vehicle. Check behind the drilling area before starting.

Photos illustrate the method only. Determine the exact position on each vehicle; no drilling template is supplied.



A Mark and drill

Drill a Ø5 mm pilot hole, then enlarge it to Ø10 mm. Deburr and protect exposed metal.



B Feed the cable

Pass the free end of the switch cable through the prepared hole and route it into the frame.



C Secure the switch

Seat the switch and secure it with the 3.9 × 14 mm screw. Check that the plunger moves freely.

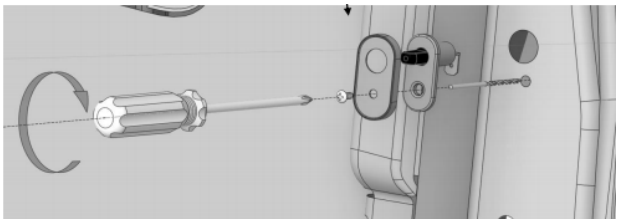

Fit the switch and mounting plate in the illustrated order. Check free plunger movement.

How the door switch operates

The switch works in the same way whether the door is opened and closed manually or by an automatic door motor . Door opens: the plunger is released; the control unit commands the step to extend. Door closes: the door pushes the plunger inward; the control unit commands the step to retract.

8 Connect the orange switch wire

Connect the control unit’s orange wire to the switch, using the supplied extension where required. Secure the cable clear of moving parts and sharp edges.

9 Restore power safely

Check polarity, fixings and connections. Keep the full step movement area clear, then fit the 16 A fuse and restore the 12 V DC supply. The step may move as power is connected.

10 Check opening, closing and handover

Open door: step fully extends and stops. Close door: step fully retracts and stops. Repeat the cycle; check cable clearance and fixings. Show the user the operation and user guide.

Before driving: visually confirm that the step is fully retracted.

FINAL CHECKS | INSTALLER HANDOVER

11 Complete the installation checks

Complete these checks after mechanical mounting, wiring and door-switch installation. Keep the step movement area clear throughout powered testing.

Mechanical installation

- [ ] **Front and rear fixings**

  Confirm all brackets and fasteners are secure. Check that the housing is supported without twisting or distortion.

- [ ] **Movement clearance**

  Confirm the platform can extend and retract without contact with the vehicle or nearby equipment.

- [ ] **Support during use**

  With the step fully extended and stopped, check for looseness or unusual movement during careful normal use. Do not load the moving step.

Electrical installation

- [ ] **Supply and connections**

  Confirm correct supply polarity, secure connections and the specified 16 A fuse.

- [ ] **Cable protection**

  Check cable routing and supports. Keep cables clear of moving parts, sharp edges and exhaust heat.

- [ ] **Door-switch operation**

  Confirm that the door operates the plunger correctly without striking the switch body or trapping the cable.

Complete system test

☐ **OPEN THE DOOR**	The step fully extends and stops.
☐ **CLOSE THE DOOR**	The step fully retracts and stops.
☐ **REPEAT**	Repeat several complete cycles. Check clearances and cable movement.

The door switch operates in the same way with a manually operated or motorised door. If movement is abnormal, resolve the cause and repeat the checks before handover.

User handover Show how the step operates. Explain that users must wait until it is fully extended and stopped before stepping on it, and keep clear while it moves. Provide access to the user guide . Before driving, visually confirm that the step is fully retracted.